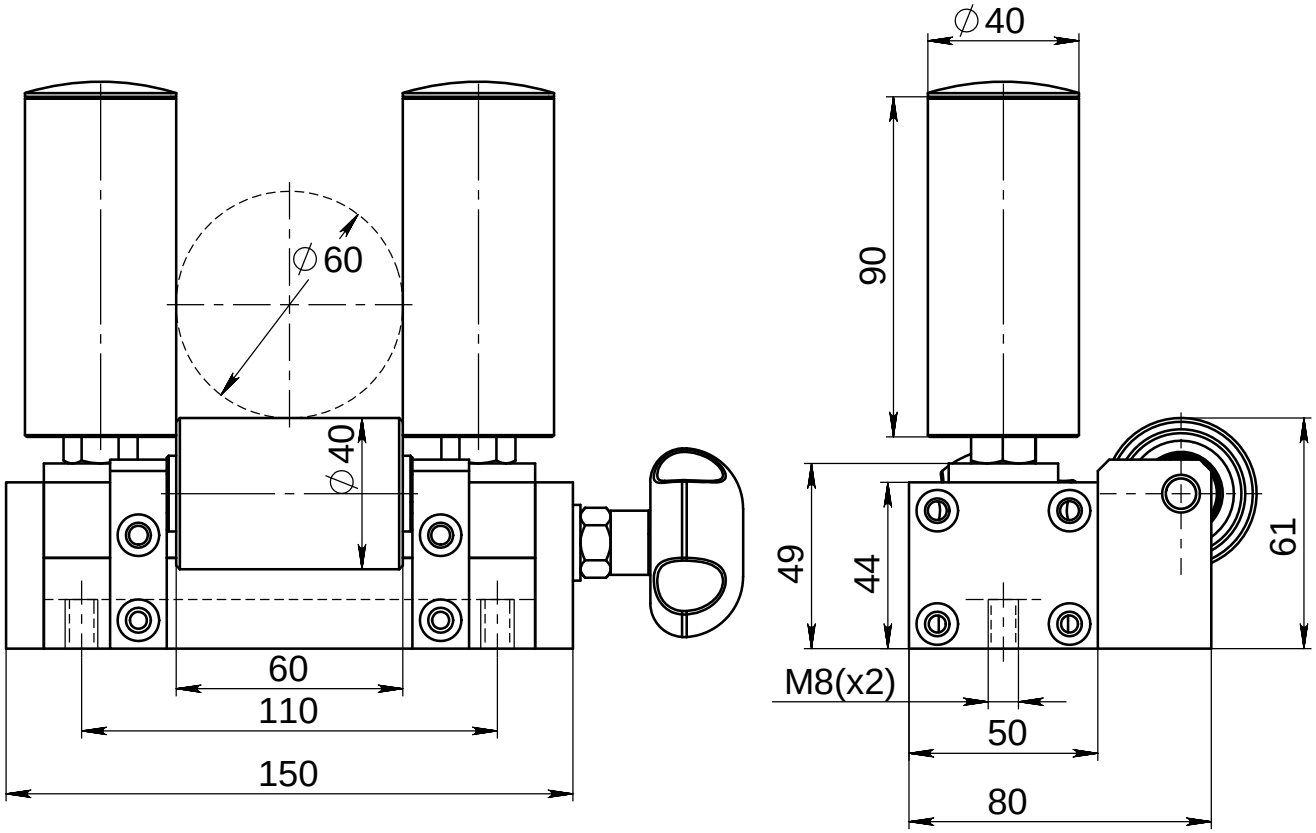

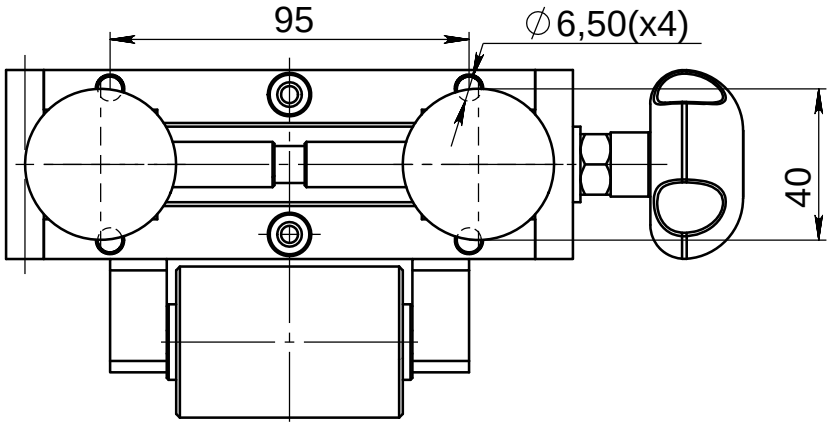

UNLESS OTHERWISE SPECIFIED: DIMENSIONS ARE IN MILLIMETERS SURFACE FINISH: TOLERANCES: LINEAR: ANGULAR:	FINISH: HRC:			DEBUR AND BREAK SHARP EDGES	DO NOT SCALE DRAWING / REVISION
					SUBEC AB
PROJECT NAME:					TITLE: Adjustable Roller guide D40L90
PROJECT NO:					
	NAME	SIGNATURE	DATE		
DRAWN			2009-09-21		
MATERIAL:			ARTICLE NO: 0052		DWG NO. 3-300080-00 40x90 / A4
Q.A			WEIGHT: g		SCALE:1:5 / SHEET 1 OF 1 / 3-300080-00 40x90